I-7018(R)(BL)(P), M-7018(R) Quick Start Guide

■ Warranty

All products manufactured by ICP DAS are under warranty regarding defective materials for a period of one year from the date of delivery to the original purchaser.

■ Warning

ICP DAS assumes no liability for damages resulting from the use of this product. ICP DAS reserves the right to change this manual at any time without notification. The information furnished by ICP DAS is believed to be accurate and reliable. However, no responsibility is assumed by ICP DAS for its use, or for any infringements of patents or other rights of third parties resulting from its use.

■ Packing List

I-7018(R)(BL)(P) or M-7018(R)	Plastic Rail	CD	Quick Start Guide
			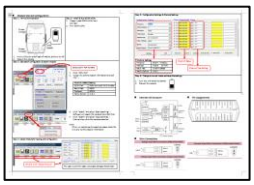

■ Internal I/O Structure < I-7018(BL)(P), M-7018 >

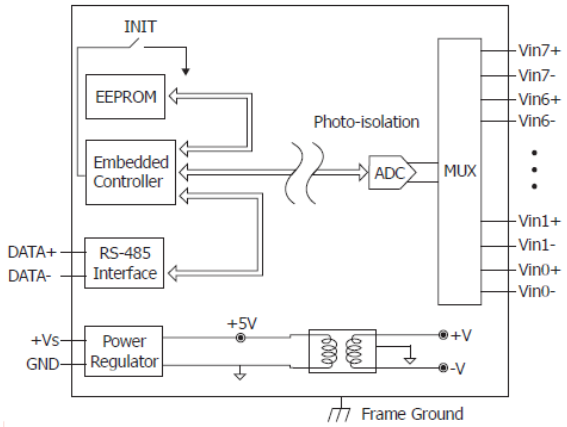

■ Pin Assignments < I-7018(BL)(P) >

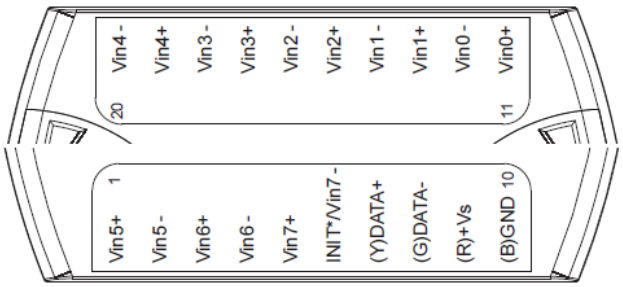

■ Pin Assignments < I-7018R, M-7018, M-7018R >

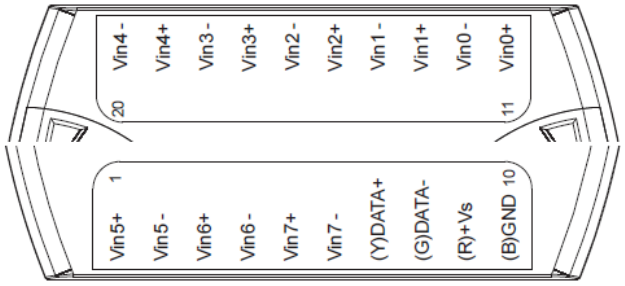

■ Internal I/O Structure < I-7018R, M-7018R >

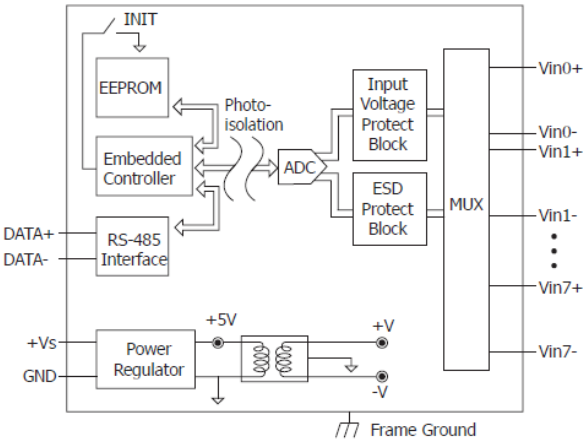

■ Wire Connections < I-7018(BL)(P) Channel 0 – 5, M-7018 , I-7018R, M-7018R >

Voltage Input Wire Connection

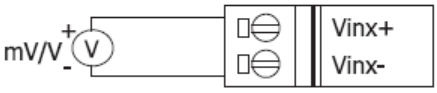

Current Input Wire Connection

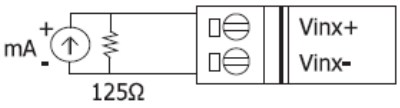

Requires Optional External 125 Ω Resistor

Thermocouple Input Wire Connection

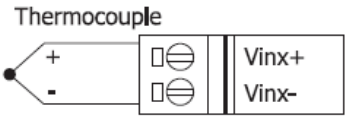

■ Wire Connections < I-7018(BL)(P) Channel 6 – 7 >

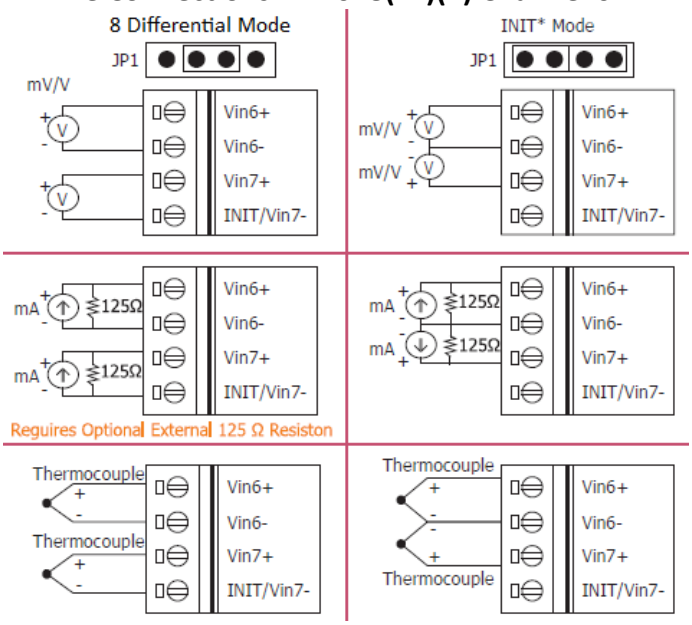

■ Modbus Table (M-7018, M-7018R only)

Address	Description	R/W
30001 ~ 30008 40001 ~ 40008	Analog input value of channel 0 to 7	R
30129 40129	CJC temperature in 0.01°C	R
40353 ~ 40360	CJC offset of channel 0 to 7 in 0.1°C. 1 for 0.1, 127 for 12.7, 255 for –0.1, 128 for –12.8	R/W
40481	Firmware version (low word)	R
40482	Firmware version (high word)	R
40483	Module name (low word)	R
40484	Module name (high word)	R
40485	Module address, valid range: 1 ~ 247	R/W
40486	Bits 5:0 Baud rate, 0x03 ~ 0x0A Code 0x03 0x04 0x05 0x06 Baud 1200 2400 4800 9600 Code 0x07 0x08 0x09 0x0A Baud 19200 38400 57600 115200 Bits 7:6 00: no parity, 1 stop bit 01: no parity, 2 stop bit 10: even parity, 1 stop bit 11: odd parity, 1 stop bit	R/W
40487	Type code	R/W

Address	Description	R/W
40488	Modbus response delay time in ms, valid range: 0 ~ 30	R/W
40489	Host watchdog timeout value, 0 ~ 255, in 0.1s	R/W
40490	Channel enable/disable, 00h ~ FFh	R/W
40491	Module CJC offset in 0.01°C	R/W
40492	Host watchdog timeout count, write 0 to clear	R/W
00257	Protocol, 0: DCON, 1: Modbus RTU	R/W
00259	Filter setting, 0: 60Hz rejection, 1: 50Hz rejection	R/W
00260	Modbus host watchdog mode 0: same as I-7000 1: can use AO and DO command to clear host watchdog timeout status	
00261	1: enable, 0: disable host watchdog	R/W
00268	1: enable, 0: disable CJC	R/W
00269	Modbus data format, 0: hex, 1: engineering	R/W
00270	Host watch dog timeout status, write 1 to clear host watch dog timeout status	R/W
00273	Reset status, 1: first read after powered on, 0: not the first read after powered on	R

■ DCON Protocol

Functions	Command	Response	Notes
Read module name	$AAM	!AA(Data)	AA: address number
Read module firmware version	$AAF	!AA(Data)	
Read all analog input data	#aa	>(data)	
Read analog input data of each channel (<=16 channel)	#aai	>(data)	i: channel number (Hex)
Read analog input data of each channel (>16 channel)	#aaii	>(data)	ii: channel number (Hex)

If you want to know the detail DCON protocol, please check it from CD or web
CD path: \\napdos\7000\manual\
Web: ftp://ftp.icpdas.com/pub/cd/8000cd/napdos/7000/manual/

■ Module test and configuration

Step 1: INIT switch Operation

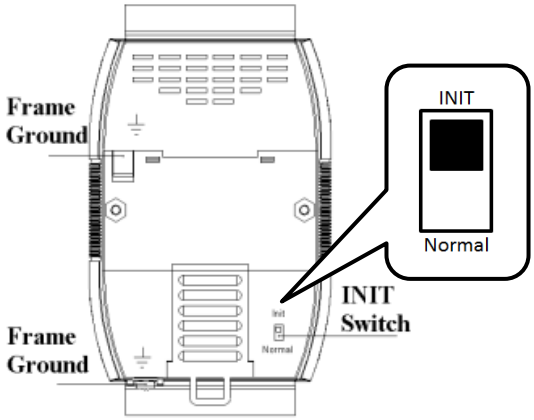

1. Find out the INIT switch(back of the module), and turn to INIT.
2. Reboot the module

Step 2: Install & Run DCON Utility

1. Please Install DCON Utility first
   You can find the software in the CD.

   CD path:
   <Driver>:\napdos\driver\dcon_utility\

   Web link:
   http://ftp.icpdas.com/pub/cd/8000cd/napdos/driver/dcon_utility/

2. Run DCON utility

Step 3: Set search configuration & search module

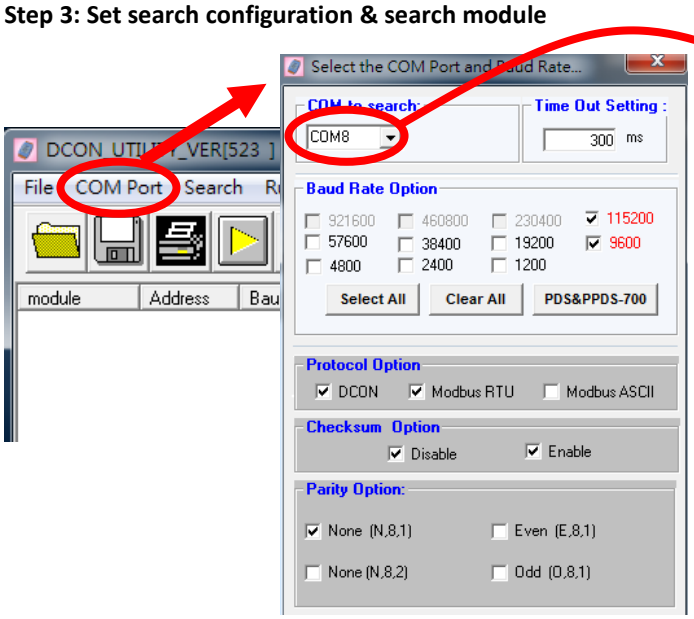

Select COM Port Number

1. Click "COM Port"
2. Assign the communication information and click "OK"

Module Default Setting	
COM Port	Refer converter Port Number
Baud Rate	9600
Protocol	DCON for I-7000 Modbus RTU for M-7000
Parity Option	N,8,1

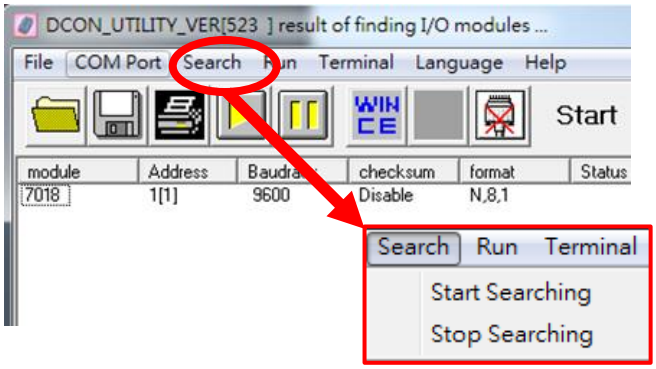

3. Click "Search" and select "Start Searching"
   Software will search the modules from COM Port
4. Click "Search" and select "stop searching"
   Manual stop when the modules searched

Note:
When no module can be searched, please check the wire and communication information

Step 4: Select Module for testing and configuration

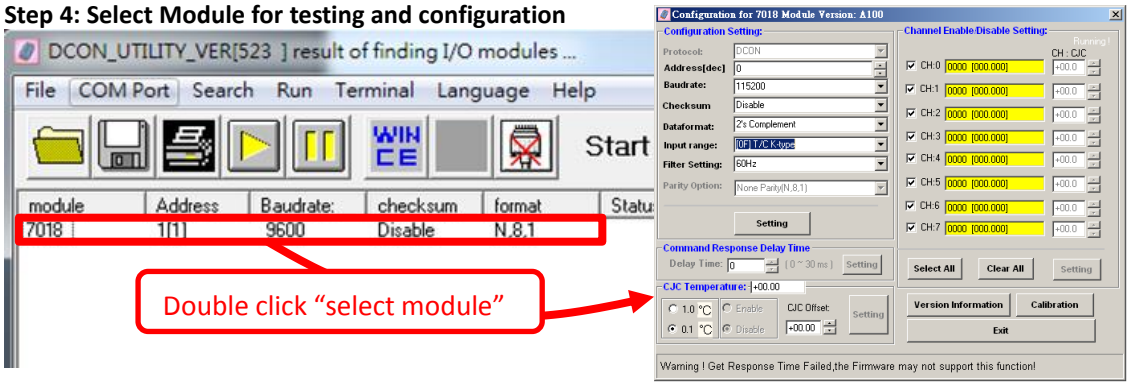

Double click "select module"

Step 5: Configuration Settings & Channel Settings

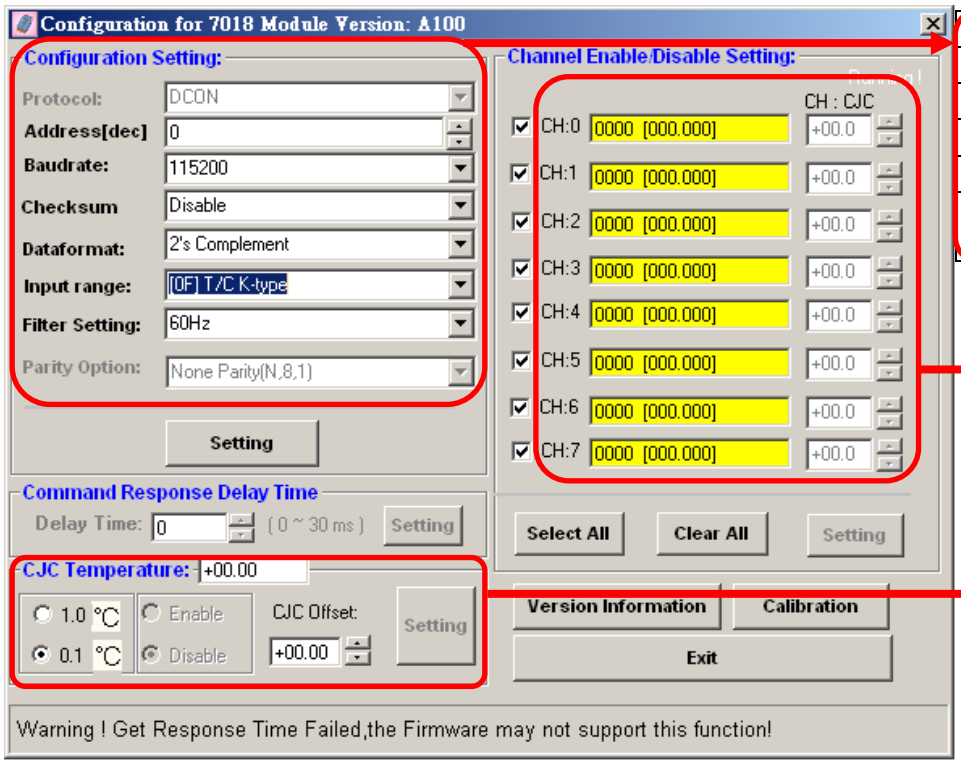

Module Settings	
Protocol	DCON / Modbus
Address	1~255 (0:INIT)
Baud rate	1200~115200
Parity option	N,8,1
Input range	Depends on signal sources

Channel Status
CJC Offset

Temperature Offset Settings

Step 6: Change to normal mode and keep the settings

1. Turn the INIT Switch to Normal.
2. Reboot the module

■ Trouble Shooting

Q1. How to do when forgot module address or baud rate?

Please turn to INIT mode, and run DCON Utility to search.
The module supports DCON protocol at the INIT mode.
And the address is 0. The communication setting is “9600,N,8,1”.

Q2. How to configure the I-7000 and M-7000 modules?

ICP DAS provide DCON Utility to configure I-7000 and M-7000 modules.
Please download the last version from: http://ftp.icpdas.com/pub/cd/8000cd/napdos/driver/dcon_utility/

Q3. How to measure the current?

I-7018(R)(BL)(P) and M-7018(R) require optional external resistance (125Ω) for current measurement.
Please refer wired connections diagram.
And then select a suitable input range by DCON Utility.

Q4. What is the CJC function?

CJC (Cold-Junction Compensation) offset is for the temperature measurement.
You can set a CJC offset for all channels or different channel in DCON Utility,

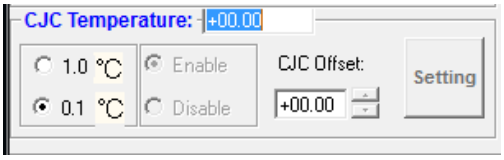

Q5. How to programming with I-7000 or M-7000 by C#, VB, VC?

ICP DAS I-7000 and M-7000 series both support DCON protocol. And Only M-7000 series supports Modbus protocol.
For DCON protocol, please download SDK and Demo from:
http://ftp.icpdas.com/pub/cd/8000cd/napdos/driver/dcon_dll_new/
For Modbus protocol, please refer this web link:
http://www.icpdas.com/products/PAC/i-8000/modbus.htm

If there is any other question, please feel free to contact us. Email: service@icpdas.com
Website: http://www.icpdas.com.tw/contact_us/contact_us.html